DIMENSIONS & SANITARY PIPE CONNECTIONS						
"A"	NO.	NAME	PORT SIZE	QTY	MATERIAL	STYLE
10" - 30.2"	N1	INLET	2"	1	316L	CLAMP
20" - 40.2"	N2	OUTLET	2"	1	316L	CLAMP
30" - 50.2"	N3	GAUGE PORT	1"	1	316L	CLAMP
40" - 60.2"	N4/N5	DRAIN PORTS	0.5"	1	316L	CLAMP
	N6	VENT PORT	0.5"	1	316L	CLAMP

HOUSING SPECIFICATIONS	
DESIGNED PRESSURE (PSIG)	195
OPERATING PRESSURE (PSIG)	150
OPERATING TEMP (°C)	110

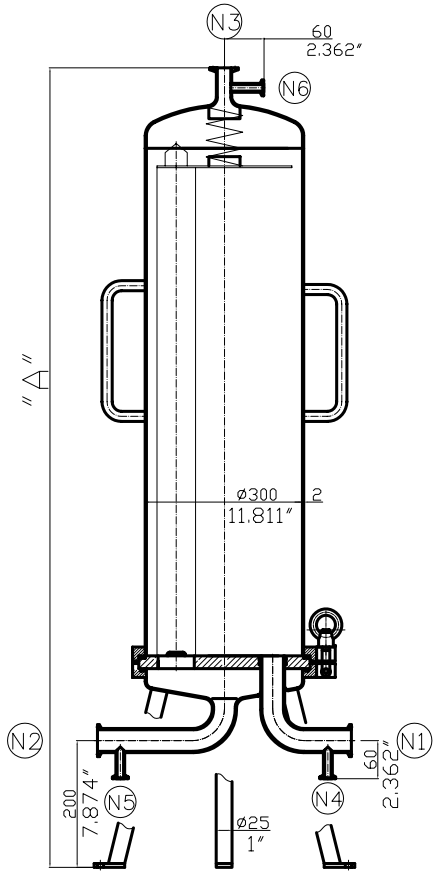

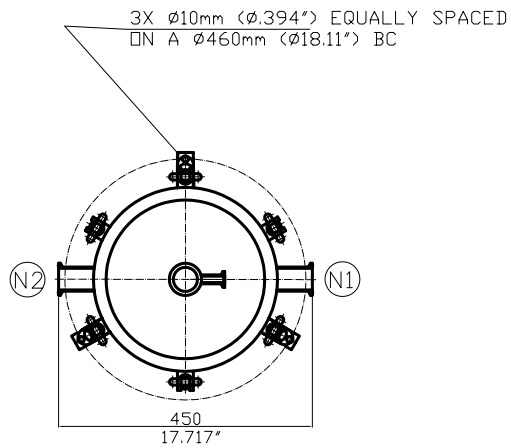

TECHNICAL PARAMETERS
1. THIS APPARATUS MEETS GMP STANDARD
2. ALL WELD-SEAMS ARE ARGON WELDED
3. MAXIMUM CORROSION RESISTANCE
4. SURFACE FINISH: 400# MACHINE POLISH-PASSIVATE-ELECTROPOLISH ALL SURFACES.
5. MATERIAL: 316L

ITEM	QTY	LIST OF MATERIAL	NUMBER

ACAD FILE # CSH8.DWG

UNLESS OTHERWISE SPECIFIED
All dimensions are in inches.
Remove all burrs and break sharp edges.
Tolerances :
Decimals
.XX ± .01
.XXX ± .005
Angles ± 1°
Surface Roughness 63
DO NOT SCALE PRINT

MATERIALS
SURFACE TREATMENT

This drawing and the data contained thereon are confidential and the property of Critical Process, Nashua, NH U.S.A. It is to be used in manufacturing for Critical Process Corp or its subsidiary corporations. Any other use or reproduction of this drawing is expressly prohibited without Critical Process's consent.

DWN BY	DATE
BMD/DN	3/08
CHK BY	DATE
APPD BY	DATE
APPD BY	DATE
APPD BY	DATE
RELEASE	DATE

CRITICAL PROCESS FILTRATION, INC
NASHUA, NH
WWW.CRITICALPROCESS.COM
PH: 603-880-4420

TITLE
SALES DRAWING
8 ROUND
SANITARY T-STYLE

SIZE D | DWG NO CSH8 | REV –